BECKMAN

INSTRUCTIONS FOR USING THE JA-20 FIXED ANGLE ROTOR

In Beckman J-21 and J-6 Series Centrifuges

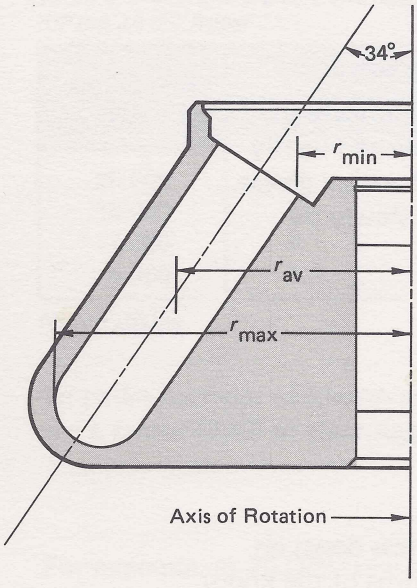

SPECIFICATIONS (J-21 SERIES CENTRIFUGE)

Maximum speed	20 000 rpm*
Maximum solution density	1.2 g/ml
Maximum allowable imbalance of opposing loads	2 grams
Minimum speed	any except Critical Speed Range†
Relative Centrifugal Field‡	
At r_{max} (108 mm)	48 384 x g
At r_{av} (70 mm)	31 360 x g
At r_{min} (32 mm)	14 336 x g
k factor at maximum speed	770
Number of tube cavities	8
Available tubes	see Table 4
Maximum nominal dimensions	29 x 104 mm
Maximum nominal capacity	50 ml
Nominal rotor capacity	400 ml
Approximate acceleration time to maximum speed (rotor fully loaded)	1.5 min
Approximate deceleration time from maximum speed (rotor fully loaded)	2.5 min
Approximate weight of loaded rotor	5.4 kg (12 lb)
Rotor material	aluminum
Speed reduction for solution densities greater than 1.2 g/ml	see RUN SPEED

*Or less, depending on the type of tube (see Table 4).

†The Critical Speed Range (600 to 800 rpm) is the range of speeds over which the rotor shifts so as to rotate about its center of mass. Passing through the Critical Speed Range is characterized by some vibration.

‡Relative Centrifugal Field (RCF) is the ratio of the centrifugal acceleration at a specified radius and speed ($r\omega^2$) to the standard acceleration of gravity (g) according to the following formula:

$$RCF = \frac{r\omega^2}{g}$$

where r is the radius in millimeters, ω is the angular velocity of radians per second ($2\pi RPM/60$), and g is the standard acceleration of gravity (9807 mm/s^2). After substitution:

$$RCF = 1.12\,r\left(\frac{RPM}{1000}\right)^2$$

GE-0787-.4-DT
PUBLISHED BY SPINCO DIVISION OF BECKMAN INSTRUMENTS, INC., PALO ALTO, CALIFORNIA 94304

DESCRIPTION

The JA-20 fixed angle rotor is rated for 20 000 rpm and is designed to hold up to eight 50-ml tubes at a 34° angle. Used primarily in the J-21 series of centrifuges, the rotor develops centrifugal forces that can efficiently pellet bacteria, cell membranes, and subcellular particles. Short column methods (i.e., partially filled tubes) may also be used to isolate and band different classes of subcellular organelles. The rotor and lid are anodized aluminum. Drive pins in the center of the rotor seat into the centrifuge drive hub and prevent slippage of the rotor. When properly greased, the Buna N O-rings in the lid and rotor body (see Figure) maintain atmospheric pressure inside the rotor during centrifugation. The rotor is warranted for seven years.

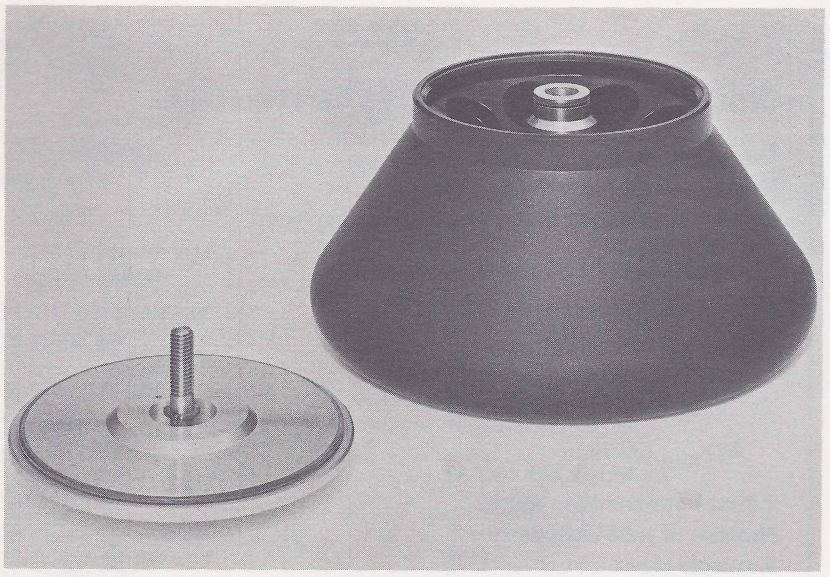

The JA-20 Fixed Angle Rotor

OPERATION

Rotor Installation

The rotor may be precooled before use, if desired. Use Spinkote™ to lubricate the drive spindle of the instrument where it will contact the rotor drive hole and lightly coat the O-rings in the rotor lid and body with a thin layer of silicone vacuum grease. Carefully lower the rotor straight down onto the drive shaft. Rotate it slowly by hand until it seats correctly on the drive pins.

CAUTION

The centrifuge drive spindle can be bent if the rotor is forced sideways or dropped onto it. Install the rotor by centering it over the spindle and carefully lowering it straight down.

The pins located in the spindle must be seated at the bottom of the grooves in the spindle hub of the centrifuge. Running a rotor which is not seated properly may result in rotor failure.

After the rotor is seated on the drive hub, place the lid on the rotor, press down on the knob, and screw the knob down tight (requires at least three full turns of the knob).

Rotor Removal

To remove the rotor from the centrifuge, unscrew the lid and lift the rotor straight up off the drive. Should the rotor stick to the drive spindle, a collar adapter and

rotor removal tool may be used (available from Beckman—see the SUPPLY LIST). Remove the lid and small O-ring from the rotor. Slide the flanges of the collar into the empty O-ring groove. Screw the larger end of the rotor removal tool into the threaded opening in the collar adapter. As the removal tool tightens down, it will push against the drive spindle, causing the rotor to rise within the centrifuge chamber. Remove the tool and collar adapter from the rotor by reversing the above procedure and replace the O-ring in the groove. You should now be able to remove the rotor from the centrifuge. Subsequent lubrication of the centrifuge drive spindle with Spinkote should prevent the rotor from sticking.

Temperature control settings for this rotor vary, depending on which J-series centrifuge is used. J2-21M and J-6M centrifuge settings are automatic. Table 1 provides information required for proper temperature control in the J2-21 centrifuge. Table 2 provides similar information for the J-21B and J-21C centrifuges. For J-21, J-6, and J-6B centrifuges, appropriate temperature control values must be empirically determined. See the appropriate centrifuge instruction manual for other centrifuge operating procedures.

Table 1. J2-21 Centrifuge Temperature Control Settings for the JA-20 Rotor

Rotor Speed (rpm)	Desired Sample Temperature (°C)						
	–20	–10	2	5	10	20	40
20 000	*N*	*N*	*–9*	*–8*	*–7*	*–7*	*–6*
18 000	*N*	*N*	*–6*	*–6*	*–5*	*–4*	*–3*
15 000	*–5*	*–4*	*–4*	*–4*	*–3*	*–2*	*–1*
10 000	*–2*	*–2*	*–1*	*0*	*0*	*0*	*0*

N: not usable

Turn the SET knob to the desired sample temperature and set the COMP dial on the appropriate setting (italic type). Interpolate if intermediate values are required.

Table 2. J-21B and J-21C Centrifuge Temperature Control Settings for the JA-20 Rotor

Rotor Speed (rpm)	Desired Sample Temperature (°C)			
	2	5	10	20
20 000	*N*	*11*	*10*	*9*
18 000	*8*	*7.5*	*7*	*6*
14 000	*4*	*3.5*	*3*	*3*
8 000	*1.5*	*1*	*0.5*	*0*

N: not usable

Turn the CONTROL dial to the desired sample temperature and set the COMPENSATE dial on the appropriate setting (italic type). Interpolate if intermediate values are required.

To pellet particles of known sedimentation coefficient s, calculate the run time t using the k factor (770) of the rotor.[1] Time is in hours and s is in Svedberg units.

$$t = \frac{k}{s}\left(\frac{20\,000 \text{ rpm}}{\text{actual run speed}}\right)^2$$

For example, at 20 000 rpm, mammalian viruses (s = 700 S) can be pelleted in

$$t = \frac{770}{700}\left(\frac{20\,000}{20\,000}\right)^2 = 1.1 \text{ hour.}$$

[1] Based on sedimentation in water at 20° C.

RUN SPEED

When solutions more dense than 1.2 g/mL are centrifuged in this rotor, the maximum allowable run speed must be reduced according to the following equation:

$$\text{reduced maximum speed} = (20\,000\ \text{rpm})\sqrt{\frac{1.2\ \text{g/mL}}{\text{density of tube contents}}}$$

The centrifugal force at a given radius in a rotor is a function of rotor speed. Comparisons of forces between different rotors are made by comparing the rotors' releative centrifugal fields. When rotational speed is adjusted so that identical samples are subjected to the same RCF in two different rotors, one may then describe the samples as being subjected to the same force (see Table 3).

Table 3. Relative Centrifugal Fields. Entries in this table are calculated from the formula RCF = 1.12r(RPM/1000)^2

Rotor Speed (rpm	Relative Centrifugal Field (x *g*)		
	At r_{max} (108 mm)	At r_{av} (70 mm)	At r_{min} (32 mm)
20 000	48 384	31 360	14 336
19 500	45 995	29 811	13 628
19 000	43 666	28 302	12 938
18 500	41 398	26 832	12 266
18 000	39 191	25 401	11 612
17 500	37 044	24 010	10 976
17 000	34 957	22 657	10 357
16 500	32 931	21 344	9 757
16 000	30 965	20 070	9 175
15 500	29 060	18 835	8 610
15 000	27 216	17 640	8 064
14 500	25 431	16 483	7 535
14 000	23 708	15 366	7 024
13 500	22 044	14 288	6 531
13 000	20 442	13 249	6 056
12 500	18 900	12 250	5 600
12 000	17 418	11 289	5 160
11 500	15 996	10 368	4 739
11 000	14 636	9 486	4 336
10 500	13 335	8 643	3 951
10 000	12 096	7 840	3 584
9 500	10 916	7 075	3 234
9 000	9 797	6 350	2 903
8 500	8 739	5 664	2 589
8 000	7 741	5 017	2 293
7 500	6 804	4 410	2 016
7 000	5 927	3 841	1 756
6 500	5 110	3 312	1 514
6 000	4 354	2 822	1 290
5 500	3 659	2 371	1 084
5 000	3 024	1 960	896
4 500	2 449	1 587	725
4 000	1 935	1 254	573
3 500	1 481	960	439
3 000	1 088	705	322
2 500	756	490	224
2 000	483	313	143
1 500	272	176	80
1 000	120	78	35
500	30	19	8

TUBES

The tubes listed in Table 4 may be run in the JA-20 rotor under the conditions specified. For a discussion of the chemical resistances, cleaning, and sterilization of tubes and adapters, see a J-6 or J-21 series instruction manual or publication IN-175.

Tubes must be loaded symmetrically in the rotor, and opposing loads should balance to within 2 grams. Adapters are required (see Table 4) when tubes smaller than 29 mm in diameter are run. Discard rubber adapters in which glass tubes have broken since pieces of glass will be embedded in the rubber and will break subsequently used tubes.

MAINTENANCE

It is important not to use sharp metal tools on the rotor, since corrosion begins in scratches and may open fissures in the metal with increased use. The Rotor Cleaning Kit (see Supply List) contains brushes that will not scratch, and two quarts of a mild detergent. If the rotor has been scratched by broken glass tubes or metal tools, ask your local Beckman Representative about having the rotor reanodized. For long rotor life, store the cleaned rotor upside down with the lid off to help prevent corrosion in the cavities. Do not store the rotor in the centrifuge.

Table 4. Tubes and Bottles

Note that the maximum speeds listed in this table are guidelines only. These speeds have been achieved in reliability tests at Spinco Division, but because of manufacturing variations, no guarantee of performance or fit is expressed or implied. Beckman tubes and bottles are recommended for use in this rotor. **P = Pyrex, C = Corex** (do not run below 4°C), **PC = Polycarbonate, PP = Polypropylene.** *Sealed* containers are bottles with three-piece, liquid-tight cap assemblies. *Capped* containers are either snap-cap tubes, or bottles with screw-on caps. Other containers have no caps. Pyrex and Corex are registered trademarks of Corning Glass Works.

Part Number	Description	Nominal Volume per Tube (ml)	Max. Fill* Volume per Tube (ml) (approx.)	Maximum Speed (rpm)	Nominal Dimensions (mm)	Adapter(s) Required
355602	PP, sealed	50	45	20 000	29 x 104	none
355600	PC, sealed	50	45	20 000	29 x 104	none
355668	PP, capped	50	40	20 000	29 x 103	none
355669	PC, capped	50	40	20 000	29 x 103	none
355671	PP, capped	50	40	20 000	29 x 104	none
355670	PC, capped	50	40	20 000	29 x 104	none
335431	C	30	28	10 000	25 x 105	870331
335430	C	15	14	10 000	17 x 100	870329
335432	P	15	12	6 000	16 x 100	870329

*Above 20°C fill polypropylene tubes at least half full. Containers may be filled less than or equal to the "Maximum Fill Volume per Tube" provided in these lists.

To ensure the vacuum seal of the rotor lid, occasionally check and clean the Teflon[2] washer under the knob, and the nylon insert in the lid. Replace O-rings every six months (or as necessary). Silicone vacuum grease should be routinely applied to both the O-ring in the lid and the small O-ring in the center of the rotor.

Routinely apply Spinkote to the rotor drive hole to prevent it from sticking to the centrifuge drive hub.

CLEANING

Under normal use the rotor should be washed at least once a week. Also remove the O-rings from the rotor and lid and wipe them clean. Wash the rotor immediately after use if you have run salt solutions or other corrosive materials, or if spillage has occurred. Do not allow corrosive solutions to dry on the rotor. Most laboratory detergents are too harsh for use on aluminum rotors because they can attack the anodized surface. Beckman has prepared a detergent (Solution 555™) for use with all rotors and rotor accessories (purchase the Rotor Cleaning Kit). Solution 555 should be diluted 5 or 10 to 1 with water. Rinse a cleaned rotor with distilled water and air dry upside down. Do NOT use acetone to dry the rotor.

[2] Registered trademark of E.I. du Pont de Nemours & Company.

DECONTAMINATION

A rotor (and/or accessories) contaminated with radioactive material should be decontaminated using a solution that will not damage its anodized surface. Beckman has tested a number of solutions and found two which do not harm anodized aluminum: RAD-CON (Nuclear Associates, Carle Place, New York 11514) and RADIACWASH (Atomic Products Corp., Center Moriches, New York 11934). Beckman does not, however, warrant the performance of these products with respect to their effect on the rotors (and/or accessories) or their ability to decontaminate these parts.

CAUTION

Strongly alkaline solutions will damage the rotor.

STERILIZATION

The rotor may be disinfected with 70% ethanol[3] or sterilized by autoclaving at 121°C for one hour. To autoclave, remove the lid from the rotor and place both in the autoclave with the rotor upside down.

INSPECTION

Periodically inspect the rotor (especially inside the cavities) for rough spots, pitting, white powder deposits (frequently aluminum oxide), or heavy discoloration. If any of these signs is evident *do not run the rotor.* Show it to your Beckman Field Service Representative.

For all rotors, your Beckman Representative provides contact with the Field Rotor Inspection Program and with the rotor repair program.

SUPPLY LIST

ROTOR REPLACEMENT PARTS

Large O-ring	870612
Small O-ring	870980

OTHER

Silicone vacuum grease	335148
Tubes and bottles	see Table 4
Rotor Cleaning Kit	339558
Rotor removal tool	346965
Collar adapter for rotor removal tool	338689
Spinkote lubricant	306812

[3] Not recommended for use in the centrifuge, due to flammability hazard.

SPECIAL J-21 SERIES ROTOR WARRANTY

Subject to the conditions specified below and the warranty clause of the Beckman terms and conditions of sale in effect at the time of sale, Beckman agrees to correct either by repair, or, at its election, by replacement any defects of material or workmanship which develop within seven (7) years after delivery of a J-21 series rotor to the original buyer by Beckman or by an authorized representative, provided that investigation and factory inspection by Beckman discloses that such defect developed under normal and proper use. Should a Beckman centrifuge be damaged due to a failure of a rotor covered by this warranty, Beckman will supply free of charge all centrifuge parts required for repair.

REPLACEMENT

Any product claimed to be defective must, if requested by Beckman, be returned to the factory, transportation charges prepaid, and will be returned to Buyer with the transportation charges collect unless the product is found to be defective in which case Beckman will pay all transportation charges.

A defective rotor will be replaced by Beckman at its then current list price less a credit based upon the age of the rotor (years since date of purchase). The Buyer shall not receive credit until the claimed defective rotor is returned to Beckman's Spinco Division at Palo Alto, California, or delivered to a Beckman Field Representative.

The replacement price (cost to Buyer) for the respective rotor shall be calculated as follows:

$$\text{Replacement price} = \text{Current rotor list price} \times \frac{\text{years}}{7}$$

CONDITIONS

1. Except as otherwise specifically provided herein, this warranty covers the rotor only and Beckman shall not be liable for damage to accessories or ancillary supplies including but not limited to (i) tubes, (ii) tube caps, (iii) tube adapters or (iv) tube contents.

2. This warranty is void if the rotor has been subjected to customer misuse such as operation or maintenance contrary to the instructions in the Beckman rotor or centrifuge manual.

3. This warranty is void if the rotor is operated with a rotor drive unit or in a centrifuge unmatched to the rotor characteristics, or with carriers or buckets unmatched to the rotor characteristics, or operated in a Beckman centrifuge that has been improperly disassembled, repaired or modified.

4. Rotor bucket sets purchased concurrently with or subsequent to the purchase of a swinging-bucket rotor are warranted only for a term coextensive with that of the rotor for which the bucket sets are purchased.

Disclaimer

IT IS EXPRESSLY AGREED THAT THE ABOVE WARRANTY SHALL BE IN LIEU OF ALL WARRANTIES OF FITNESS AND OF THE WARRANTY OF MERCHANTABILITY AND THAT BECKMAN SHALL HAVE NO LIABILITY FOR SPECIAL OR CONSEQUENTIAL DAMAGES OF ANY KIND WHATSOEVER ARISING OUT OF THE MANUFACTURE, USE, SALE, HANDLING, REPAIR, MAINTENANCE, OR REPLACEMENT OF THE PRODUCT.

Beckman Sales and Service Offices

ORDER ASSISTANCE: **United States** **800-742-2345**
Alaska and Nevada (Call Collect) ..... **(415) 857-0750**

FIELD SERVICE: **United States** **800-551-1150**
Alaska and Nevada (Call Collect) ..... **(415) 857-0750**
Hawaii ..... **(808) 396-4233**

U.S. SALES OFFICES

CALIFORNIA
2500 Harbor Boulevard
Fullerton, 92634-3100
(714) 773-6666

Stanford Industrial Park
P.O. Box 10015
Palo Alto, 94303-0982
(415) 857-0750

GEORGIA
3145 Medlock Bridge Road
Norcross, 30071-1423
(404) 449-9009

ILLINOIS
3311 North Kennicott Avenue
Arlington Heights, 60004-1489
(312) 398-2440

MARYLAND
8920 Route 108
Columbia, 21045-2101
(301) 982-1970
(301) 995-0975

MASSACHUSETTS
Lakeside Office Building
607 North Avenue
Wakefield 01880-1360
(617) 245-6800

NEW JERSEY
45 Belmont Drive
Somerset, 08873-1287
(201) 560-0076

TEXAS
5810 Hillcroft Avenue
Houston, 77036-3377
(713) 781-0810

INTERNATIONAL OFFICES

AFRICA, MIDDLE EAST:
Beckman Instruments International S.A.
17 rue des Pierres-du-Niton
1207 Geneva, Switzerland
Telephone: (22) 356480

AUSTRALIA
Beckman Instruments (Australia) Pty., Ltd.
24 College Street
Gladesville, NSW 2111, Australia
Telephone: (02) 816-5288

AUSTRIA
Beckman Instruments G.m.b.H. Austria
Eastern European Operations
Stefan Esders Platz 4
A-1190 Vienna, Austria
Telephone: (222) 32-2557

CANADA
Beckman Instruments (Canada) Inc.
1045 Tristar Drive
Mississauga, Ontario, Canada L5T 1W5
Telephone: (416) 673-9844

DENMARK
Beckman Instruments
Blokken 65
DK-3460 Birkerød, Denmark
Telephone: (02) 819211

FRANCE
Beckman Instruments France S.A.
52 Chemin des Bourdons
Gagny, France 93220
Telephone: (01) 4381-93 00

GERMANY
Beckman Instruments G.m.b.H.
Frankfurter Ring 115
8000 München, Germany
Telephone: (89) 38871

Authorized dealers in other countries.

HONG KONG
Beckman Instruments (Hong Kong) Ltd.
15th Floor
Gee Chang Hong Centre
65 Wong Chuk Hang Road
Aberdeen, Hong Kong
Telephone: (5) 539236

ITALY
Beckman Analytical S.P.A.
Via Lario 12
20159 Milan, Italy
Telephone: (02) 69911

JAPAN
Beckman Instruments (Japan) Ltd.
6-17, Sanbancho
Chiyoda-Ku
Tokyo, Japan
Telephone: (03) 221-5831

MEXICO
Beckman Instruments de Mexico
S.A. de C.V.
Chilpancingo Nom 148
Colonia Roma Sur
C.P. 06760 Mexico, D.F.
P.O. Box 27-124
Telephone: (5) 564-8135

NETHERLANDS
Beckman Instruments Nederland B.V.
Nijverheidsweg 21
3641 RP Mijdrecht, Netherlands
Telephone: (02) 979-85651

NORWAY
Beckman Instruments
Brynsveien 5
Postboks 102, Bryn
0611 Oslo 6, Norway
Telephone: (02) 648040

PUERTO RICO
Beckman Instruments (CSSB) Inc.
Ave. Fidalgo Diaz Esquina Laurel
Valle Arriba Shopping Center 104
Carolina, Puerto Rico 00628/1800
Telephone: (809) 762-3030

SINGAPORE
Beckman Instruments (Singapore) Pte. Ltd.
Magazine Road
02-06 Central Bldg.
Singapore 0105
Telephone: (5) 342508

SOUTH AFRICA
Beckman Instruments (Pty.) Ltd.
Stand 1A Federated Park
Tonetti Street
1685 Halfway House
Johannesburg
Republic of South Africa 200
Telephone: (11) 805-2014/15

SPAIN
Beckman Instruments España S.A.
Avda. del Llano Castellano, 15
28034 Madrid, Spain
Telephone: (01) 729-1666

SWEDEN
Beckman Instruments A.B.
Archimedesvagen 2
Box 65
S-161 26 Bromma, Sweden
Telephone: (08) 985320

SWITZERLAND
Beckman Instruments International S.A.
17 rue des Pierres-du-Niton
1207 Geneva, Switzerland
Telephone: (22) 356480

TAIWAN
Beckman Instruments (Taiwan) Inc.
13th Floor
477 Tun Hwa South Road
Taipei, Taiwan, Republic of China
Telephone: (02) 711-1166

UNITED KINGDOM
Beckman—RIIC Ltd.
Progress Road
Sands Industrial Estate
High Wycombe
Bucks HP12 4JL
United Kingdom
Telephone: (494) 41181